SECTION C-C

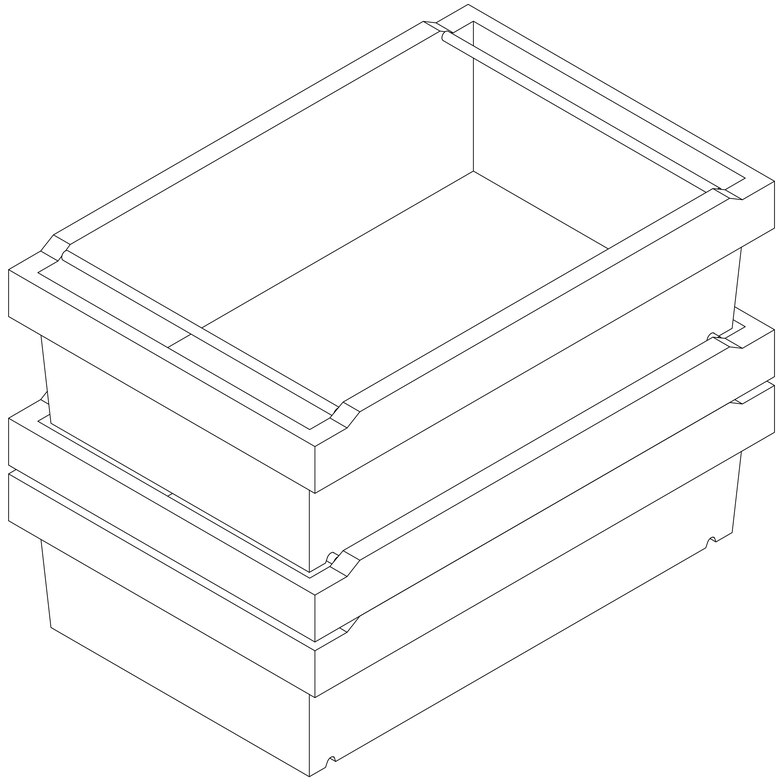

Filename: B4-600-400-180.dft
For other dimensions refer to 3D-file: B4-600-400-180.par

Rev	Modification	Date	Designer

General wall thickness	mm	Material	Error: No reference
General Draft	°	Weight	Project No.
General Rib thickness	mm	Designer: zwelzr	Date: 2014-02-06
Unless otherwise specified, use radius R1		Check	Date
Unless otherwise specified, use tolerance +/-0.5mm		Projection method	Scale
Change Drawing with CAD only		Format	A0
		Description	B4 - 600x400x180
		Drawing No. SZ-LV-Draft	Revision a
		Article No. 0000.000	Mould No. SAS 0000
		Sheet	2 of 2

ECR BALTIC EFFICIENT CONSUMER RESPONSE